GRT Sport Trim/Flap Position Install

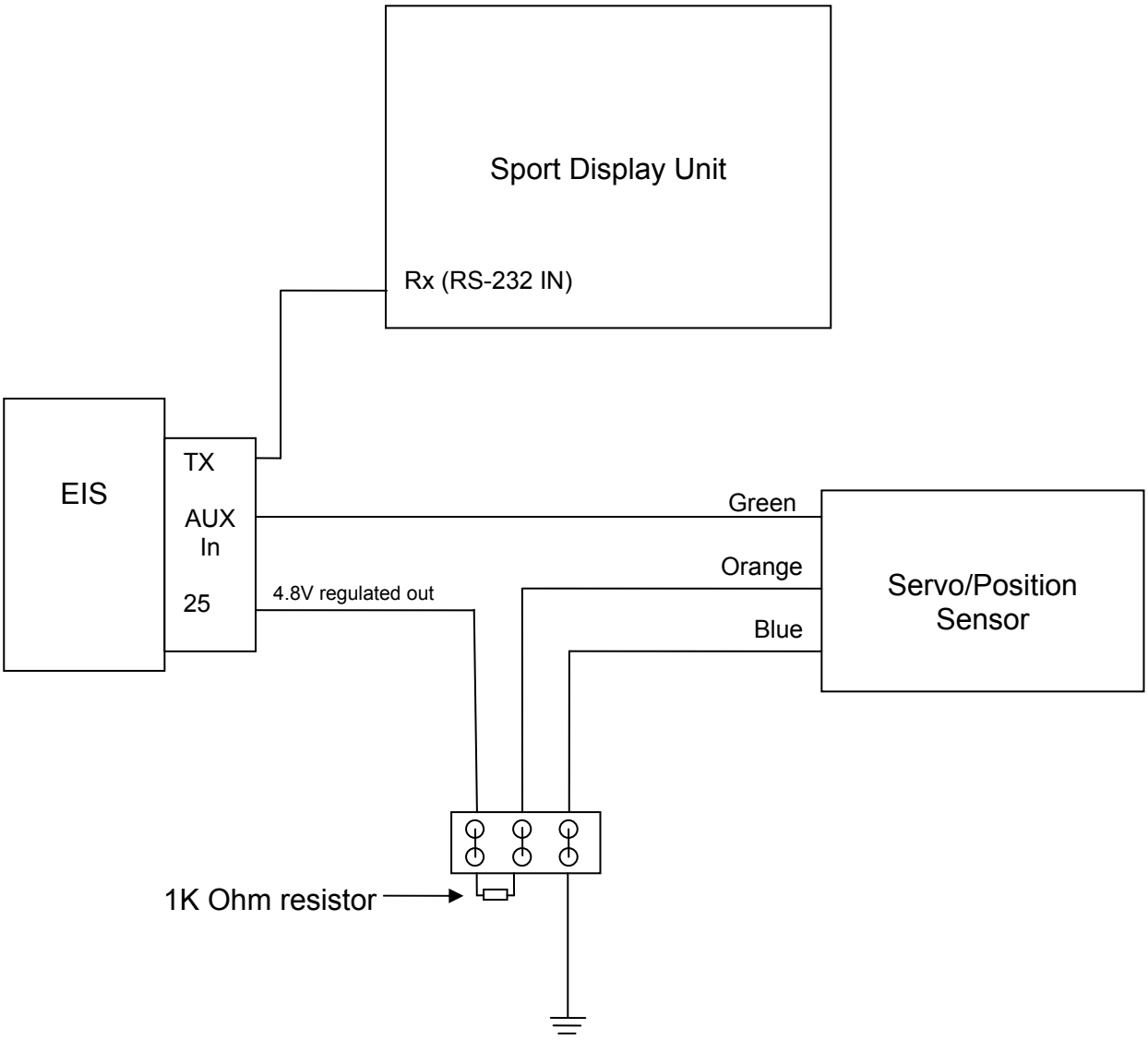

Servo/Position Sensor
Installation

February 2009